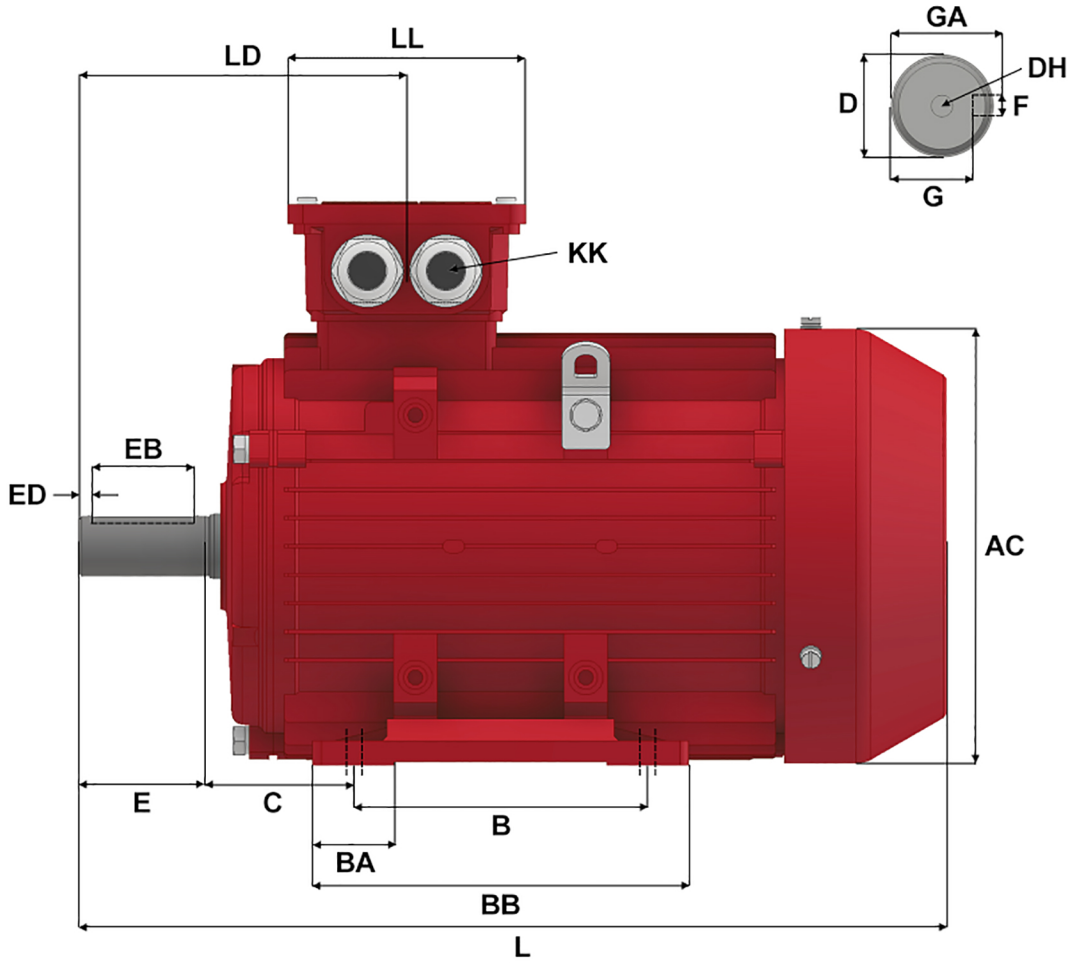

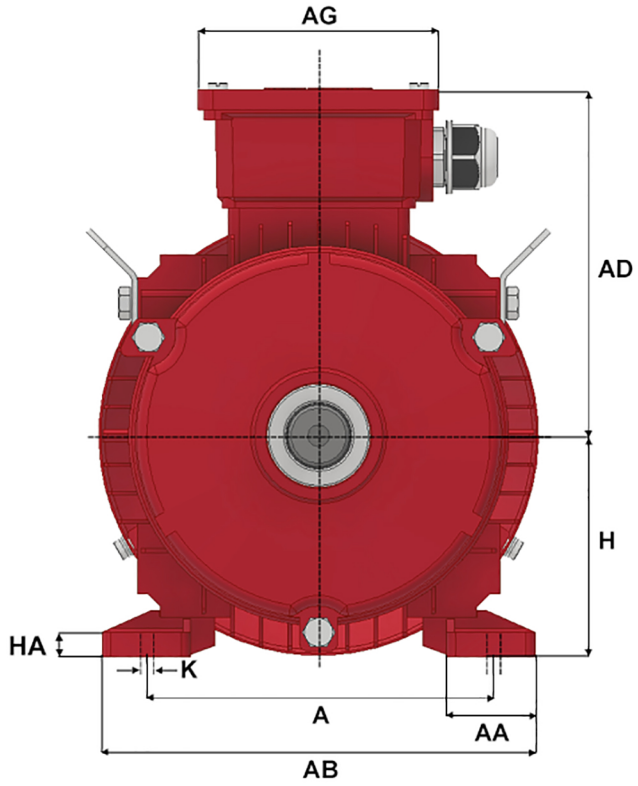

Version: 1JLEM			Revised: 09-11-2019			HP	RPM	FRAME	ENCLOSURE	IJA112M-2-B3		
Customer is responsible in determining that Max Motion product will fit/perform suitably in the intended application						5.5	3485	112M	TEFC			
A	B	C	D	E	F	G	H	K	L	AA	AB	AC
190	140	70	28	60	8	24	112	12 X 16	400	41	227	230
AD	AG	BA	BB	DH	EB	ED	GA	HA	KK (1)	KK (2)	KK (3)	LD
178	117.5	43	180	M10 X 22	50	5	31	12	M32 X 1.5	3/4'' NPT	-	151.5
LL												
117.5												